Electro-hydraulic pressure switches type DG

Pressure p_{max} = 700 bar

See also:
For electronic pressure switches type DG 5 E see D 5440 E
Analogous pressure transducer type DT 1 see D 5440 T
Analogous pressure transducer type DT 2 see D 5440 T/1

1. General information

Electro-hydraulic pressure switches are devices which close or open electrical contacts when pressurized (DIN ISO 1219-1). They are usually used for all applications where a electrical signal should be triggered whenever the set pressure is achieved or exceeded. This signal may be utilized to start a subsequent operation cycle (operation of a solenoid actuated directional valve) or to stop an operation cycle (cut-off of the pump drive, idle position of a solenoid actuated directional valve).

Type DG 1 ..
DG 8 (F)

Type DG 3 ..

2. Available versions, main data

Order examples:

DG1R F
DG 33 | -YS 8
DG 34 | V

F = Version with bezel for switch board installation

Table 3: Means of adjustment

Coding	Version
no coding (standard)	Turn knob at DG 1R(S), DG 1 RF(S) DG 8 (F) for main switch + set screw for ancillary switch Set screw at DG 3..
R	only DG 3..: Manually adjustable (Wing screw and wing nut)
V	only DG 3..: Turn knob
H	only DG 3..: Lockable turn knob (BKS-lock) Suited for keys conforming to the standards of the motor industry. Key is not scope of delivery (Key is only in the possession of the authorized operators).

Table 1: Basic type

Coding Electrical connection: Inside the device	Coding Electrical connection: Device socket DIN EN 175 301-803 (ISO 4400)	Operation pressure range p_{min} [2] ... p_{max} (bar)	Pressure resistant up to (bar) [3]	Symbol
DG 1 R [4] **DG 1 RF** [4]	**DG 1 RS** [4] **DG 1 R FS** [4]	20 ... 600	600	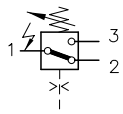
	DG 8 **DG 8 F**	20 ... 600 (main switch) 20 ... 180 (ancillary switch)	600	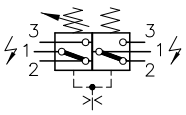
	DG 33 **DG 34** **DG 35** **DG 36** [1] **DG 364** **DG 365**	200 ... 700 100 ... 400 20 ... 250 4 ... 12 4 ... 50 12 ... 170	700	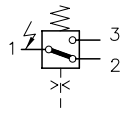

Table 2: Hydraulic connection

Suited for	Coding	Connection mode
DG 1 R.. DG 8 (F)	no coding	Direct via pipe fittings shape B conf. DIN 3852 page 2. Port thread G 1/4 ISO 228/1 (BSPP)
		Clamping nut DIN 16283 (pressure gauge fitting, e.g. DIN 16270)
	For combination with various connectors, see D 7065	
DG 3..	no coding	Basic version for sub-plate mounting
	- 1/4	Sub-plate G 1/4
	- Y1	Tapped journal G 1/4 A
	- Y2	Tapped journal M12x1.5
	- Y3	Tapped journal G 1/8
	- YS 6 **- YS 8**	Tapered journal ∅6 and ∅8 for progressive ring and sleeve nut
	- Y6 **- Y8**	Pipe ∅6 and ∅8 designed for pipe fittings

1) For applications where exceeding of or returning into a lowest pressure range should be signaled. Not ideally suited for operation commands acc. to sect. 1, due to a bad hysteresis (see page 2).
2) p_{min} represents the lowest guideline pressure figure where the pressure switch is recommended. The operation hysteresis will increase dramatically below this figure
3) Independent of the selected operation point
4) Suffix „U“: The dial is rotated by 180°, e.g. DG 1 RU, DG 1 RUFS.

HAWE HYDRAULIK
HAWE HYDRAULIK SE
STREITFELDSTR. 25 • 81673 MÜNCHEN

3. Further data

3.1 General and hydraulic

Design	Spring loaded piston type pressure switch, zero leakage
Surface protection of all steel parts	DG 1 R.. and DG 8 (F) = Switch housing zinc galvanized DG 3.. = tenifer-gehärtet
Installed position	DG 1 R.. and DG 8 (F) = Standing, dial sideways, hydraulic part downwards DG 3.. = Any
Mass (weight)	DG 1 R.. = 1.3 kg; DG 8 (F) = 1.4 kg; DG 33 to 365 = 0.3 kg; DG 3..-1/4 = 0.4 kg; DG 3..-Y.. = 0.4 kg
Temperature	Ambient: approx. -40...+80°C Fluid: -25...+80°C, pay attention to the viscosity range! Start temperature down to -40°C are allowable (Pay attention to the viscosity range during start!), as long as the operation temperature during consequent running is at least 20K (Kelvin) higher. Biodegradable pressure fluids: Pay attention to manufacturer's information. With regard to the compatibility with sealing materials do not exceed +70°C. **Note:** Type DG 35 also suitable for cold-storage depot applications (permanent sub 0°C), coding DG 35 **KB**
Pressure fluid	Hydraulic fluid acc. to DIN 51524 table 1 to 3; ISO VG 10 to 68 acc. to DIN 51519 Viscosity range: min. approx. 4; max. approx. 1500 mm^2/sec Optimal operation range: approx. 10...500 mm^2/sec Also suitable are biologically degradable pressure fluids of the type HEPG (Polyalkylenglycol) and HEES (synth. Ester) at operation temperatures up to approx. +70°C.

Adjustment

The pump might after-run due to mass-effect, at applications where the pump is directly cut-off.
Also available with pre-set pressure acc. to order specification.
Type coding e.g.:
DG 33 - 600 (setting for rising pressure)
DG 33 - 600 F (setting for falling pressure)

The figures in the table represent only guideline figures.
The exact operation point must be detected with a pressure gauge!

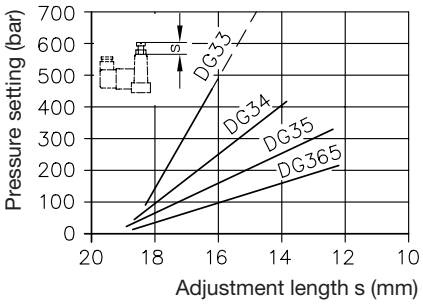

Pressure rises
Pressure drops

DG 1 R.. Via turn knob at the dial (slight deviations between scale reading and pressure gauge reading are possible.

DG 8 (F) Main switch via turn knob at the dial (like DG 1 R..)
Ancillary switch via set screw (a/f 8) after slackening the lock nut. Each turn ≈ 50 bar. The response pressure may be set either lower or max. even to the set pressure of the main switch (max. 180 bar).

Application example:
Disconnecting a control circuit which is no longer required once the preset „ancillary" pressure is exceeded within the successive operation cycle.

DG 3.. Via set screw after loosening the lock-nut (a/f 10)

DG 3..R Manually via winged set screw, after loosening the winged lock-nut

DG 3..V Manually via turn knob

DG 3..H Manually via turn knob, after opening the lock (key)

Switch pressure

The hysteresis curves below show the trigger deviations to be expected between upper trigger pressure p_o for pressure rise and lower trigger pressure for pressure drop.

The calculated pressure figure $p_u = k \cdot p_o$ is to be regarded only as a rough guideline.

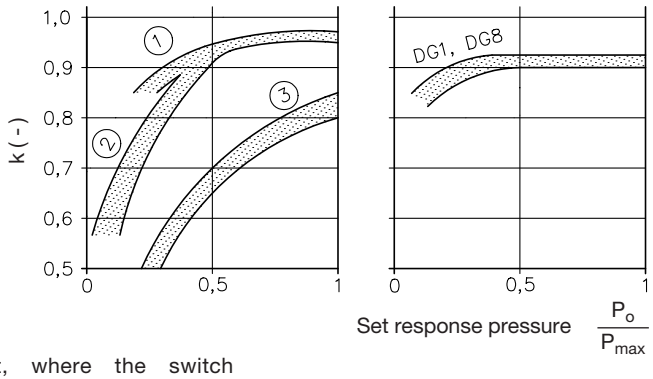

p_o = Upper trigger point, where the switch changes from idle into working position (Response pressure, adjustment range p_{min} ... p_{max}, see sect. 2, table 1)

p_u = Lower trigger point, where the switch returns from working into idle position.

p_{max} = Max. set pressure acc. to sect. 2, table 1

① DG 33, DG 34
② DG 35, DG 364, DG 365
③ DG 36

3.2 Electrical data

Protection class	DG 1R and DG 8(F) = IP 54 DG 3.. = IP 65 (IEC 60529) (DG 3..S = IP 67 (IEC 60529))
Operations/h [1]	Guideline figure max. 2000 operations/h (rather evenly distributed). Observe the max. number of operation cycles (see curve below). Tigger accuracy ± 2 ... 3% (Repeatability during pressure rise!)

Connection [1]

DG 1R(F):
via cable gland
Observe that the leads are properly routed in the switch cavity (high-flex line NYLHY 3x0.75).
An assembly manual is scope of delivery with every device.

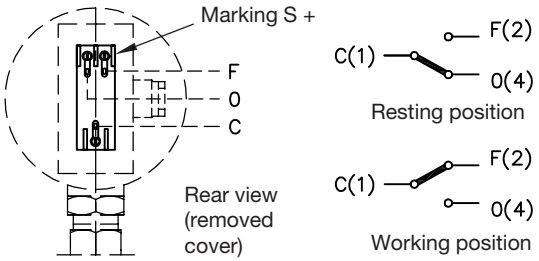

Plug connection [1]

DG 1..S, DG 8(F) and DG 3.. via 3-pin inline socket DIN EN 175 301-803 (ISO 4400). Numbering of the plug lugs beneath overlaid rubber seal. Two plugs are scope of delivery with DG 8(F), see dimensional drawing.

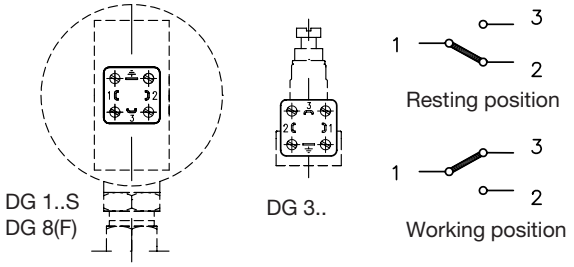

DG 3..M with electric connection M 12x1 (conforming DESINA)

Order coding: **DG 34 M -...**

Basic type DG 3 acc. to table 1

Electrical connection M 12x1

Means of adjustment and hydraulic connection acc. to table 3 and 2

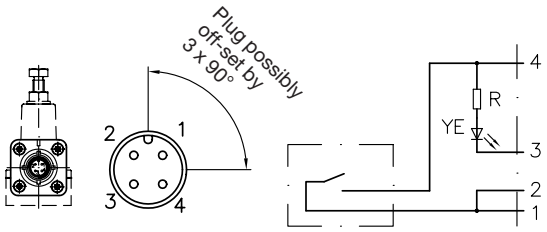

Supply voltage: U = 24V DC (18-30.2V DC conf. EN 61121-2)
Max. switched current: I_{max} = 2 A

DG 3..S for quarter-turn plug

Order coding: **DG 33 S -...**

Basic type DG 3 acc. to table 1

Electrical connection for quarter-turn plug

Means of adjustment and hydraulic connection acc. to table 3 and 2

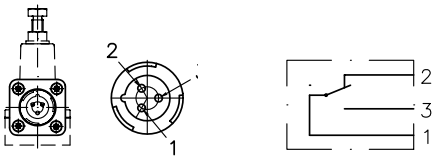

Plug: For quarter-turn PA 6, Co. Schlemmer
Angled plug 7846 010 A
Straight plug 7846 010 B

[1] Figures also apply to DG 2.. acc. to sect. 5

Continuation of sect. 3.2 **- Electrical data**

Utilized microswitch	Co. SAIA Burgess, D-26127 Oldenburg		
Pressure switch	DG 1.. [1]	DG 8 (F)	DG 3..
Microswitch type	X 04-Z 25	XFB 7-S 7	XCG 3
Mechanical service life approx.	10×10^6	30×10^6	10×10^6
Electrical service life approx. operation cycles	with 12V DC = 4 A and L/R = 10 ms 1×10^6	0.25×10^6	0.35×10^6

at 230V AC, 1 A and cos. φ = 0.3

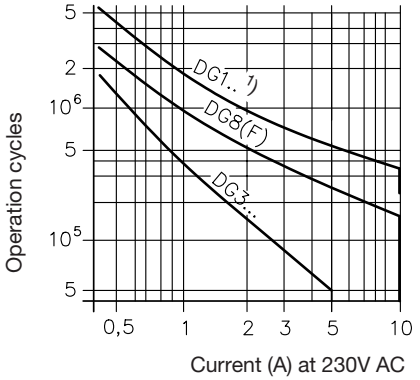

AC-operation performance VDE 0630 A/V	3/380	2/250	1/250

DC-operation performance

Observe the min. current rating to ensure flawlesss operation:

24V DC = I_{min} = 10 mA

12V DC = I_{min} = 100 mA

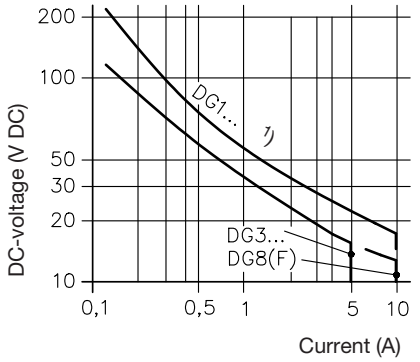

[1] Figures also apply to DG 2.. acc. to sect. 5

4. Unit dimensions

All dimensions in mm, subject to change without notice!

Type DG 1R

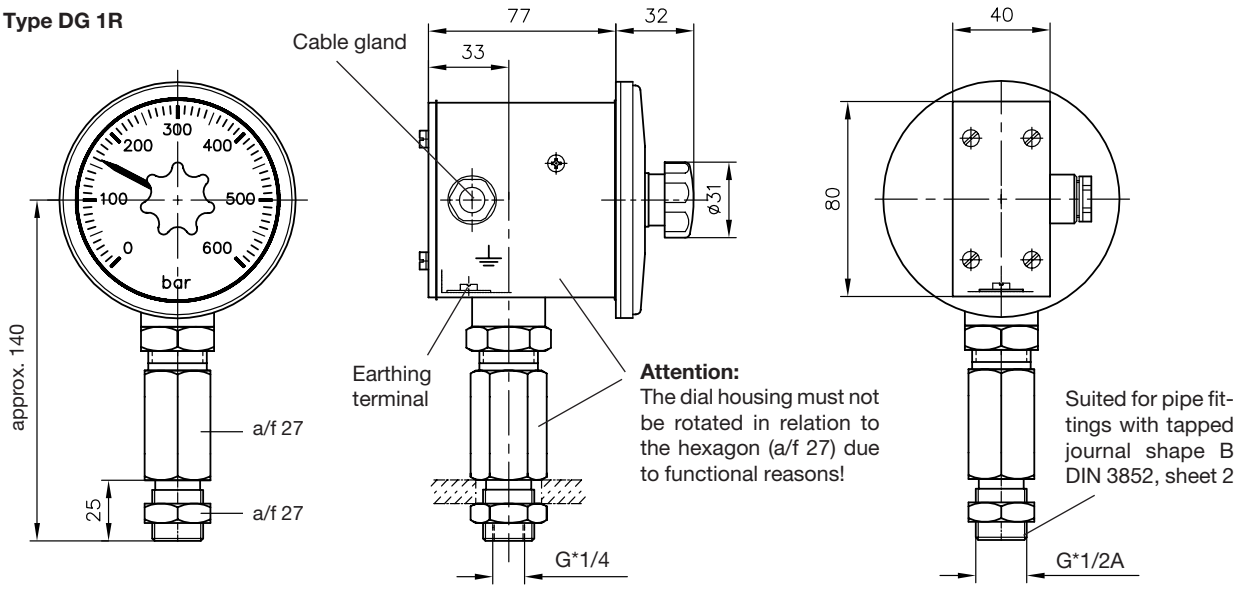

Type DG 1RF with bezel for switch board installation

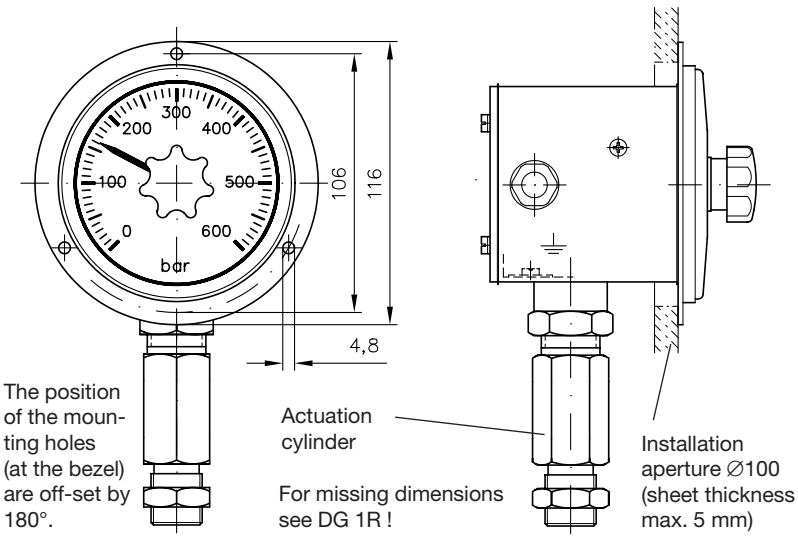

Hydraulic port [2]
Suited for type DG 1R(F)
DG 1R(F)S

Thread G*1/4 for pipe fittings

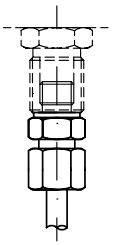

Thread G*1/2 e.g. for connecting a pressure gauge

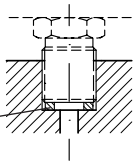

Seal ring Cu DIN 7603

Thread G*1/2 fitting type X1 (example), see D 7065

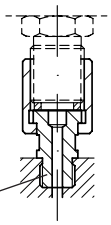

DG.. can be turned and fixed in any direction

G*1/4

Type DG 1RS, DG 1 RFS and DG 8(F)

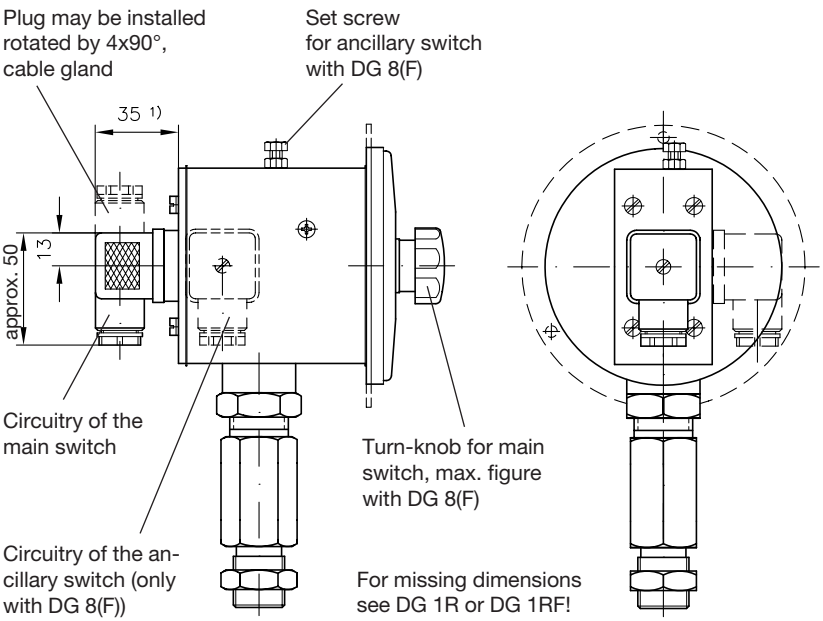

1) **Attention:** This dimension depends on the manufacturer and may be max. 46 mm acc. to DIN EN 175 301-803!

2) Applies also to type DG 2.. acc. to sect. 5

G* = (BSPP)

Type DG 3..
Standard (means of adjustment without coding)

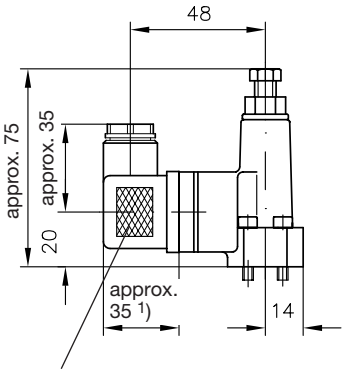

Plug may be installed rotated by 4x90°, cable gland

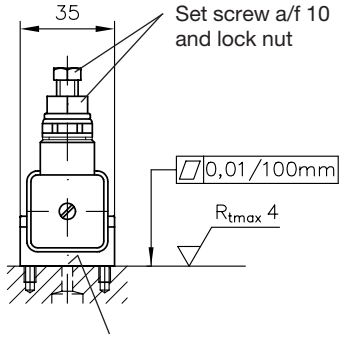

Sealing via O-ring.
Available if required as a complete seal kit: DS 5440-33 (DG 33)
DS 5440-34 (DG 34)
DS 5440-35 (DG 35)
DS 5440-36 (DG 36, DG 365)

Hole pattern for base plate
(top view)

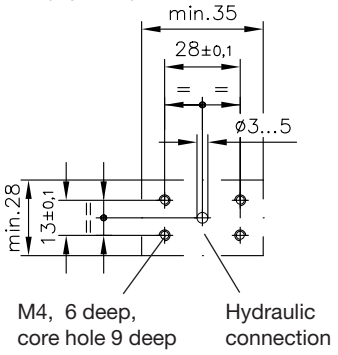

1) **Attention:** This dimension depends on the manufacturer and may be max. 40 mm acc. to DIN EN 175 301-803!

Type DG 3..M

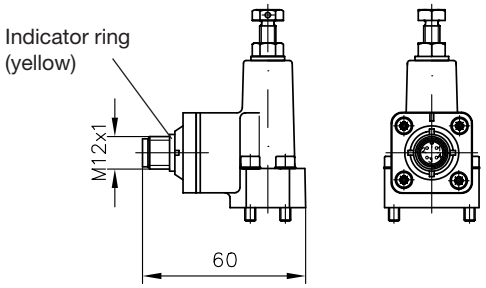

Type DG 3..S

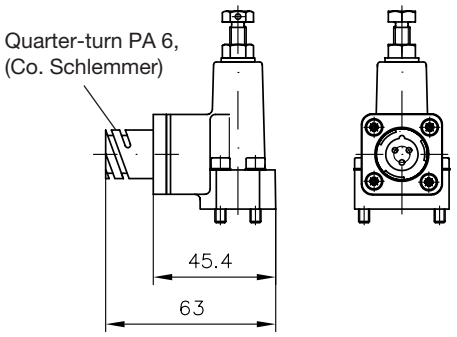

Means of adjustment coding **R**

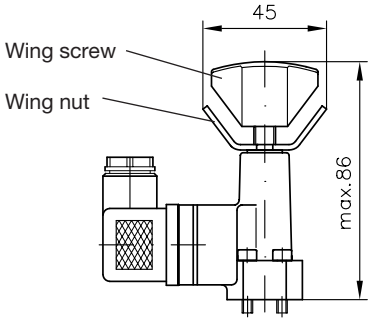

Means of adjustment coding **V**

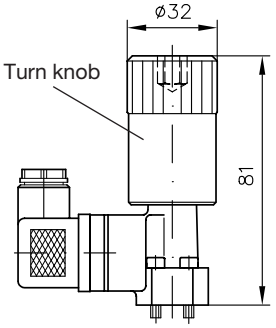

Means of adjustment coding **H**

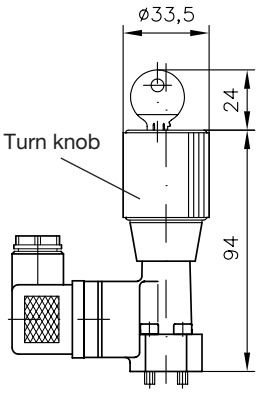

For missing dimensions see below!

G* = (BSPP)

Hydraulical connection suited for DG 3...

DG 3..**-1/4**

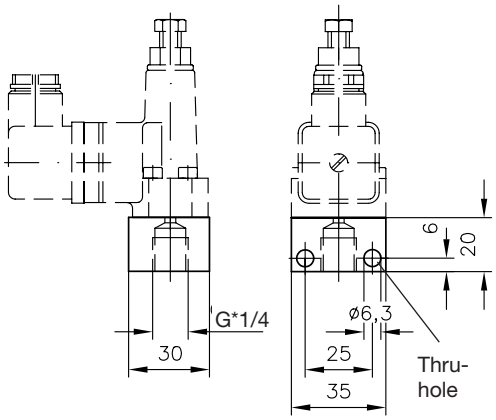

DG 3.. **- Y1** (G*1/4)
DG 3.. **- Y2** (M12x1,5)
DG 3.. - **Y3** (G*1/8)
Tapped journal
with sealing edge

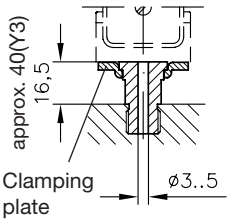

DG 3.. **- YS 6**
DG 3.. **- YS 8**
Pipe connection
with EO-progressive
ring and sleeve nut

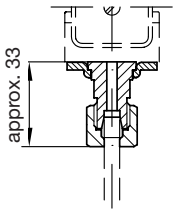

DG.. **- Y6**
DG.. **- Y8**
Pipe end

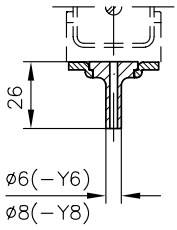

DG 3.. may be installed facing in any direction after slackening bolts M4 of the clamping plate.

5. Appendix

5.1 Type DG 2.. (run-discontinued model)

Order example: **DG 2 H - X1**

Table 4: Basic type and main data

Coding Electrical connection: Internally	Plug DIN EN 175 301-803 (ISO 4400)	Operation pressure range p_{min} [1]) ... p_{max} (bar)	Pressure resistant up to (bar) [2])
DG 20 M	**DG 20 MS**	10 ... 70	400
DG 2 M	**DG 2 MS**	40 ... 160	600
DG 2 H	**DG 2 HS**	100 ... 500	600
DG 24 H	**DG 24 HS**	400 ... 800	800

Hydraulic like type DG 1 .., see table 2 (page 1) and sect. 4 (page 5)

Type DG 2..M
DG 2..H

Type DG 2..MS
DG 2..HS

Flow pattern symbol

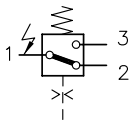

[1]) p_{min} represents the lowest guideline pressure figure where the pressure switch is recommended. The operation hysteresis will increase dramatically below this figure

[2]) Independent of the selected operation point

5.2 Further parameters

General and hydraulic

Design of	Spring loaded piston type pressure switch, zero leakage
Surface protection	Zinc galvanized
Installed position	Standing, dial sideways, hydraulic part downwards
Mass (weight)	approx. 0.5 kg
Temperatures	Ambient: approx. -40...+80°C Fluid: -25...+80°C, pay attention to the viscosity range! Start temperature down to -40°C are allowable (Pay attention to the viscosity range during start!), as long as the operation temperature during consequent running is at least 20K (Kelvin) higher. Biodegradable pressure fluids: Pay attention to manufacturer's information. With regard to the compatibility with sealing materials do not exceed +70°C.
Pressure fluid	Hydraulic fluid acc. to DIN 51524 table 1 to 3; ISO VG 10 to 68 acc. to DIN 51519 Viscosity range: min. approx. 4; max. approx. 1500 mm^2/sec Optimal operation range: approx. 10...500 mm^2/sec Also suitable are biologically degradable pressure fluids of the type HEPG (Polyalkylenglycol) and HEES (synth. Ester) at operation temperatures up to approx. +70°C.

Adjustment

The pump might after-run due to mass-effect, at applications where the pump is directly cut-off.

Pressure rises
Pressure drops

With set screw (spanner (for a/f see dimensional drawings), or corewdriver) after undoing the lock nut

The table is intended as a guideline only. The exact switch point has to be found with a pressure gauge!

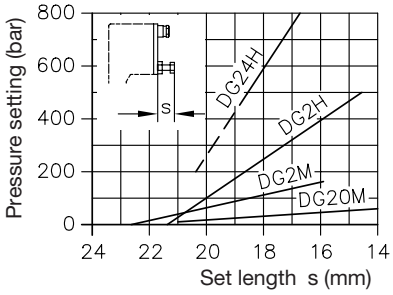

Switch pressure

The hysteresis curves below show the average difference between upper (during pressure rise) and lower switch point (during pressure drop).
The calculated pressure figure $p_u = k \cdot p_o$ [3]) must be regarded as a guideline only.

[3]) See also description "Switch pressure" in sect. 3.1

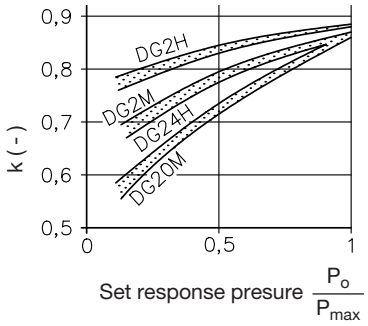

Electrical data

Protection class	IP 65 (IEC 60529)
Switings/h Electr. connection (type DG 2.H(M) Utilized micro switch (incl. data of the respective switch)	see sect. 3.2 type DG 1 R..
Plug circuitry (type DG 2..H(M)S)	see sect. 3.2 type DG 1R..S

5.3 Unit dimensions

All dimensions in mm, subject to change without notice!

Type DG 2..

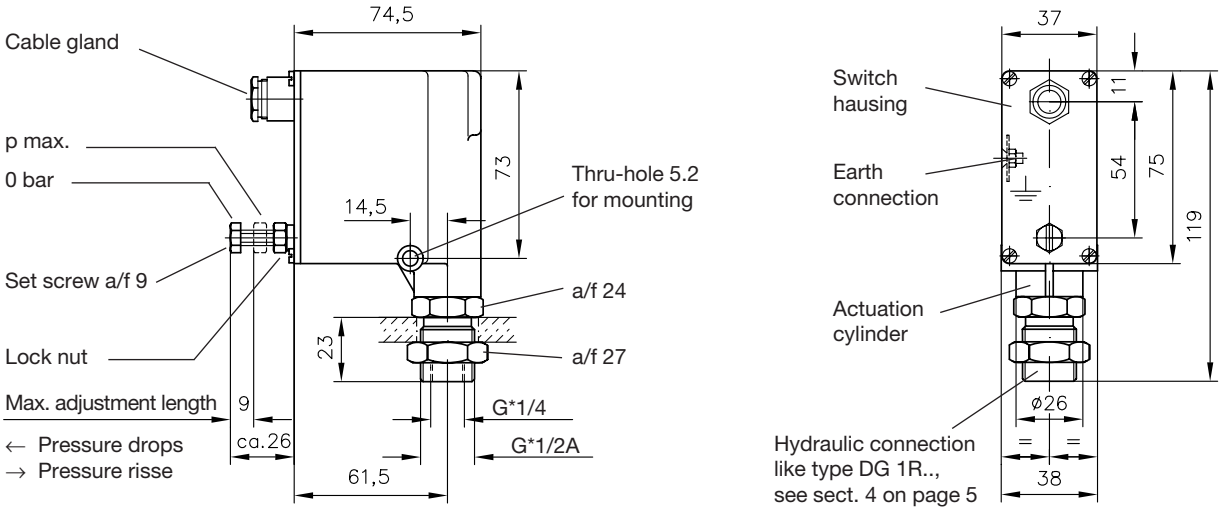

G* = (BSPP)

Type DG 2..S

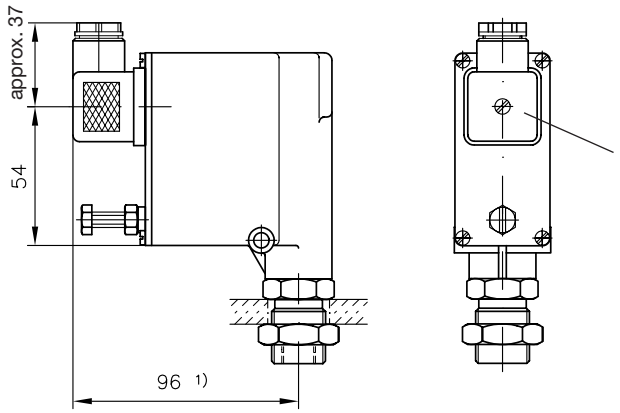

For missing dimensions, see DG 2.

1) This dimension is depending on the manufacturer and may be up to max. 11 mm (acc. to DIN EN 175 301-803)!